Please check the examination details below before entering your candidate information

Candidate surname	Other names

Pearson Edexcel Level 1/Level 2 GCSE (9–1)

Centre Number | Candidate Number

Time 1 hour 45 minutes

Paper reference **1DT0/1E**

Design and Technology

COMPONENT 1: Textiles

You must have:
calculator, ruler, HB pencil, protractor, compass

Total Marks

Instructions

- Use **black** ink or ball-point pen.
- **Fill in the boxes** at the top of this page with your name, centre number and candidate number.
- Answer **all** questions.
- Answer the questions in the spaces provided – *there may be more space than you need.*
- Calculators may be used.
- Any diagrams may NOT be accurately drawn, unless otherwise indicated.
- You must **show all your working out** with **your answer clearly identified** at the **end of your solution**.

Information

- The total mark for this paper is 100.
- The marks for **each** question are shown in brackets – *use this as a guide as to how much time to spend on each question.*

Advice

- Read each question carefully before you start to answer it.
- Try to answer every question.
- Check your answers if you have time at the end.
- Good luck with your examination.

Turn over ▶

©2021 Pearson Education Ltd.

Pearson

SECTION A

Core

Answer ALL questions. Write your answers in the spaces provided.

1 (a) The materials that products are made from are chosen because of their properties.

Figure 1 shows a table of products.

For each of the products shown, give a property of the material it is made from that makes the material suitable for the product.

The first one has been done for you.

Picture of product	Material and product	Property
	Stainless steel spoon	Corrosion resistant
	Mahogany dining room chair	**(1)** (i) .....
	High Impact Polystyrene (HIPS) drinking cup	**(1)** (ii) .....
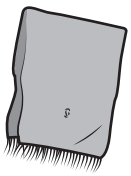	Wool scarf	**(1)** (iii) .....
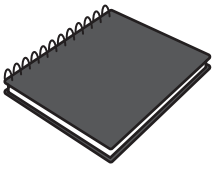	Cartridge paper sketch book	**(1)** (iv) .....

Figure 1

DO NOT WRITE IN THIS AREA
DO NOT WRITE IN THIS AREA
DO NOT WRITE IN THIS AREA

(b) Explain **one** advantage of using wind to generate energy.

(2)

.....

.....

.....

.....

As wind turbines get bigger and taller they produce more power.

(c) Figure 2 shows a table of information about two different wind turbines.

	Wind Turbine A	**Wind Turbine B**
Power (kW)	500	800

Figure 2

Calculate how much more power wind turbine B produces in comparison to wind turbine A as a percentage.

(2)

Answer ..... %

(Total for Question 1 = 8 marks)

DO NOT WRITE IN THIS AREA
DO NOT WRITE IN THIS AREA
DO NOT WRITE IN THIS AREA

2 Figure 3 shows a game.

The two sets of cubes are made from contrasting coloured non-ferrous metals.

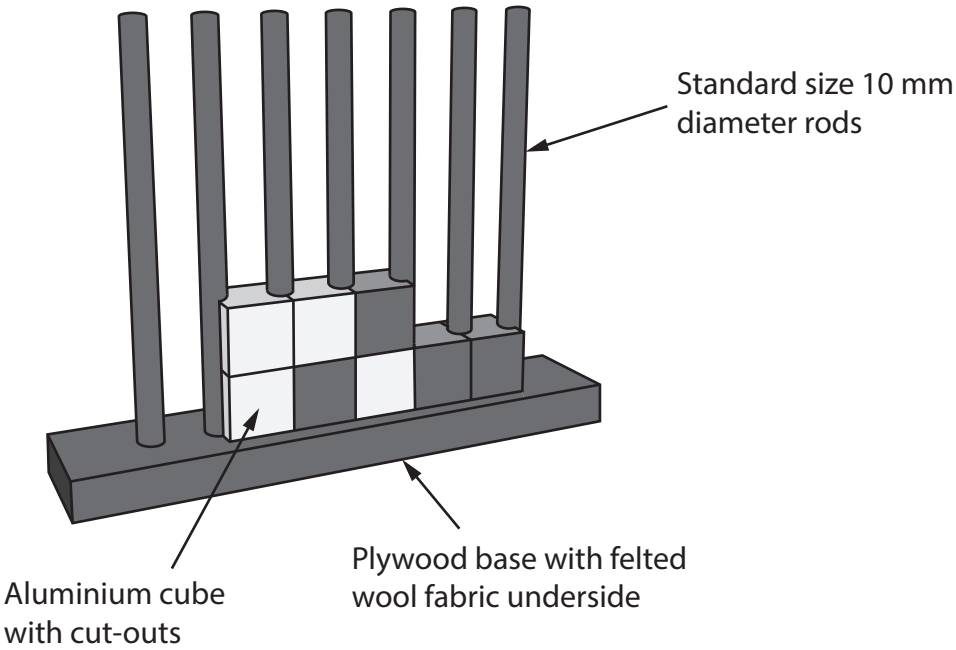

Figure 3

Aluminium is used to manufacture one set of the coloured cubes.

(a) Name **one** other appropriate non-ferrous metal that could be used to make the other set of coloured cubes.

(1)

.....

(b) Explain **one** reason for using standard sized 10 mm diameter rods.

(2)

.....

.....

.....

.....

DO NOT WRITE IN THIS AREA
DO NOT WRITE IN THIS AREA
DO NOT WRITE IN THIS AREA

(c) Explain **one** property of felted wool fabric that makes it an appropriate choice of material for gluing to the underside of the plywood base.

(2)

.....

.....

.....

.....

DO NOT WRITE IN THIS AREA
DO NOT WRITE IN THIS AREA
DO NOT WRITE IN THIS AREA

Figure 4 shows a dimensioned isometric drawing of one of the metal cubes with cut-outs.

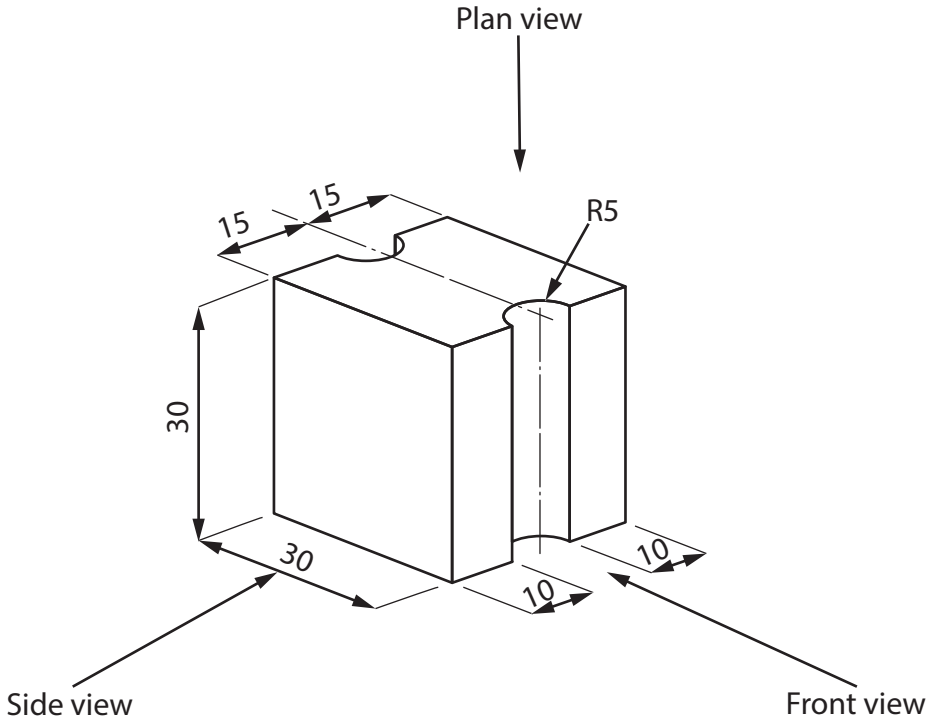

All dimensions in mm

Diagram not to scale

Figure 4

(d) Complete a full-sized orthographic drawing of the metal cube shown in Figure 4 on the 5 mm orthographic grid on the opposite page.

The front view and part of the plan view have already been done for you.

(4)

DO NOT WRITE IN THIS AREA
DO NOT WRITE IN THIS AREA
DO NOT WRITE IN THIS AREA

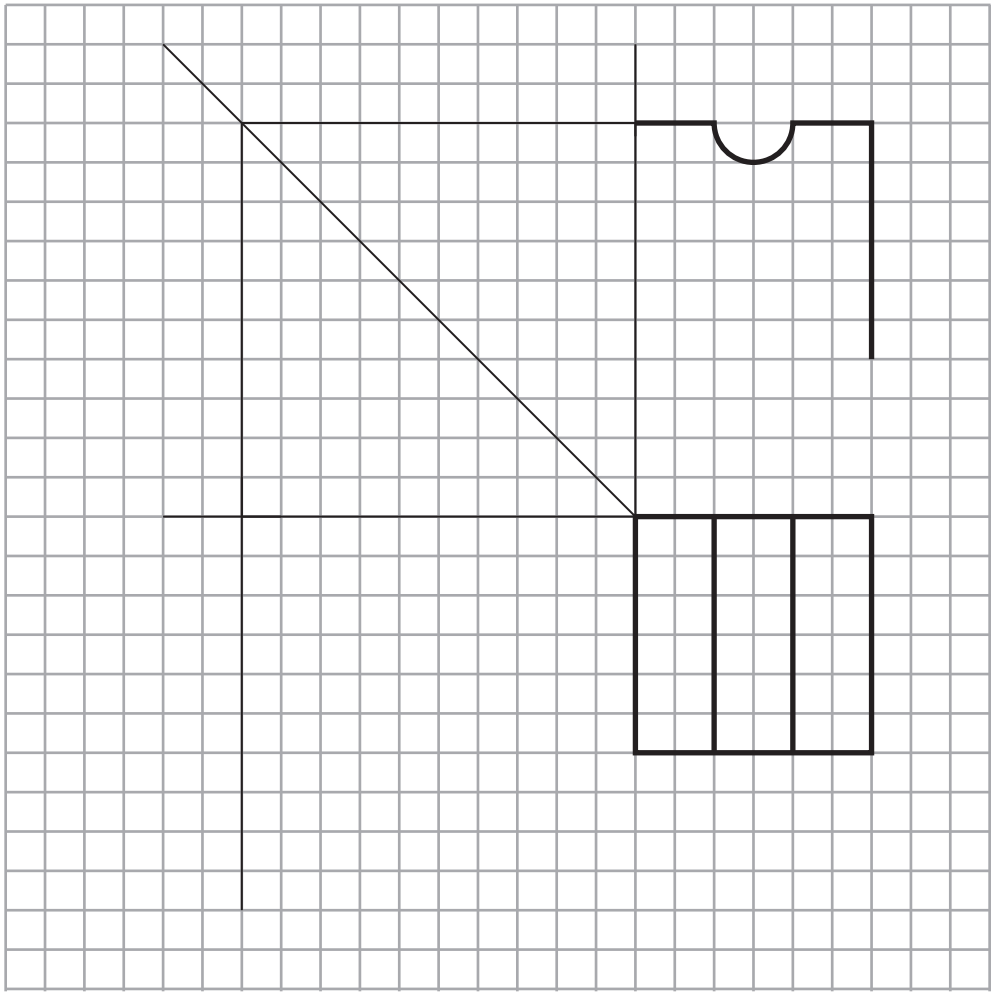

5mm orthographic grid

(Total for Question 2 = 9 marks)

DO NOT WRITE IN THIS AREA
DO NOT WRITE IN THIS AREA
DO NOT WRITE IN THIS AREA

3 Figure 5 shows a sports rowing boat manufactured from fibreglass, which is a composite material.

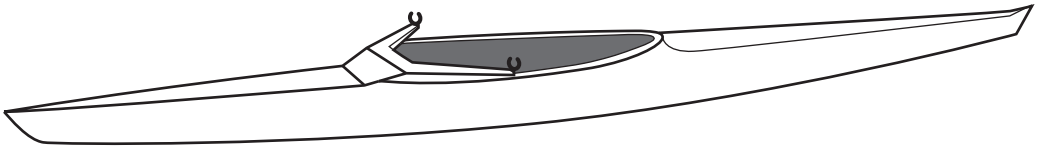

Figure 5

(a) Name **one** composite material other than fibreglass.

(1)

.....

(b) Explain **one** reason for manufacturing the sports rowing boat from fibreglass.

(2)

.....

.....

.....

.....

(c) When manufacturing fibreglass, the glass fibre matting is coated with a mixture of resin and a catalyst.

The resin and catalyst are mixed in the ratio of 100 g resin to 2 ml of catalyst.

Calculate how much catalyst would be added to 650 g of resin.

(2)

Answer ..... ml

DO NOT WRITE IN THIS AREA
DO NOT WRITE IN THIS AREA
DO NOT WRITE IN THIS AREA

(d) The sports rowing boat oar shown in Figure 6 is a lever.

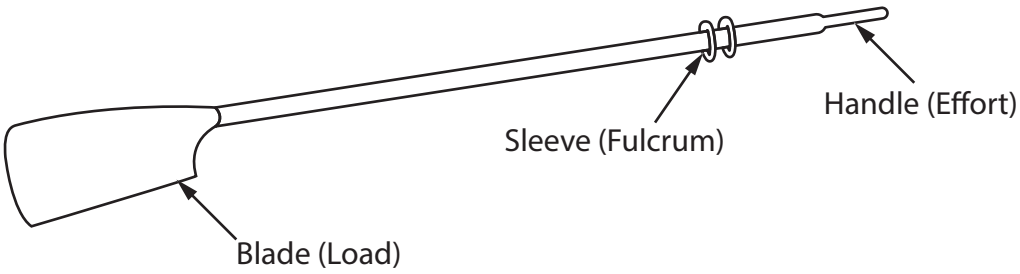

Figure 6

Analyse the boat oar.

(i) Name the lever classification for the sports rowing boat oar.

(1)

.....

(ii) State the type of movement shown by the sports rowing boat oar handle when in use.

(1)

.....

(e) Explain **two** benefits of sports textiles for athletes.

(4)

1 .....

.....

.....

2 .....

.....

.....

(Total for Question 3 = 11 marks)

DO NOT WRITE IN THIS AREA
DO NOT WRITE IN THIS AREA
DO NOT WRITE IN THIS AREA

4 Figure 7 shows a one piece corrugated board package for a smart lightbulb.

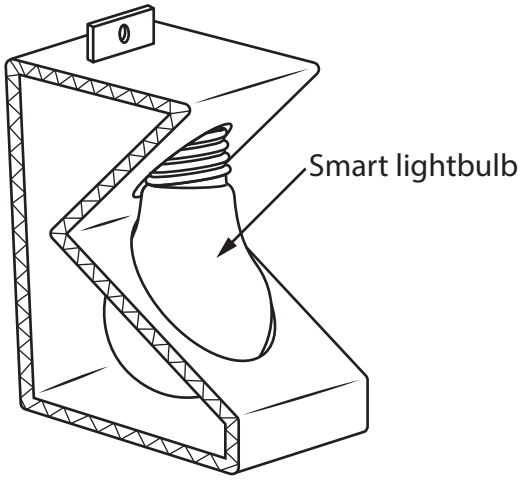

Figure 7

(a) Explain **one** working property of corrugated board that makes it an appropriate choice of material to make the lightbulb package.

(2)

.....

.....

.....

.....

(b) Explain **one** way that the cost of materials has been kept to a minimum for the lightbulb package.

(2)

.....

.....

.....

.....

DO NOT WRITE IN THIS AREA
DO NOT WRITE IN THIS AREA
DO NOT WRITE IN THIS AREA

(c) The net for the package measures 40 cm long by 8 cm wide.

The designer needs to increase the surface area of the package by $1/8^{th}$ for greater protection of the lightbulb.

Calculate the new surface area of material required for the package.

(2)

Answer ..... cm^2

The smart lightbulb can be connected to the internet.

(d) Discuss how the Internet of Things (IoT) has led to greater independence for older people living on their own in their homes.

(6)

.....

.....

.....

.....

.....

.....

.....

.....

.....

.....

.....

.....

DO NOT WRITE IN THIS AREA
DO NOT WRITE IN THIS AREA
DO NOT WRITE IN THIS AREA

(Total for Question 4 = 12 marks)

TOTAL FOR SECTION A = 40 MARKS

DO NOT WRITE IN THIS AREA
DO NOT WRITE IN THIS AREA
DO NOT WRITE IN THIS AREA

DO NOT WRITE IN THIS AREA
DO NOT WRITE IN THIS AREA
DO NOT WRITE IN THIS AREA

BLANK PAGE

SECTION B BEGINS ON THE NEXT PAGE.

SECTION B – TEXTILES

Answer ALL questions. Write your answers in the spaces provided.

5 Figure 8 shows a design solution for a laptop case together with some additional information.

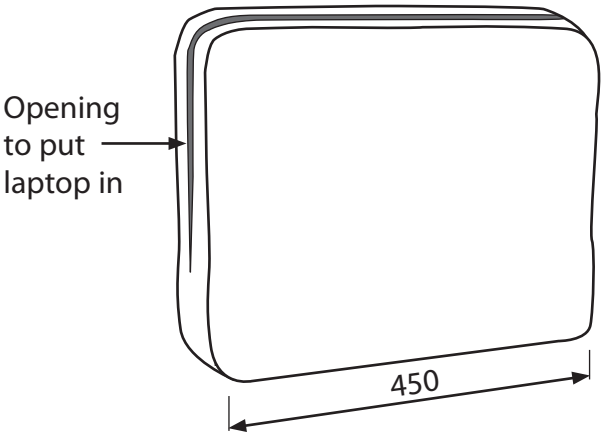

Additional information

Maximum dimensions of the mouse

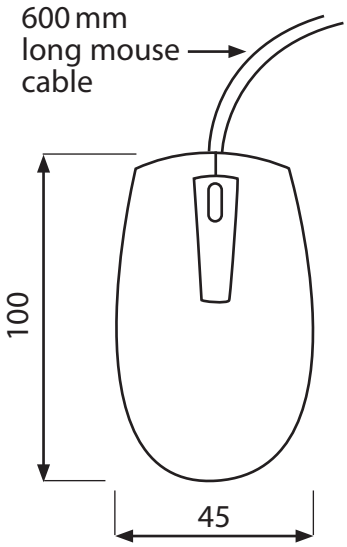

Figure 8

All dimensions in mm

DO NOT WRITE IN THIS AREA
DO NOT WRITE IN THIS AREA
DO NOT WRITE IN THIS AREA

(a) The laptop case needs to be improved to include the following specification points.

The laptop case must:

- provide a storage space for the computer mouse that will prevent the mouse cable getting tangled
- provide a method that is adjustable to hold the laptop tightly in place
- include a method that allows the user to transport the contents of the laptop case safely while still being able to use both hands

Use notes and sketches, on the outline below, to show how the laptop case could be modified to include these three specification points.

You will be marked on how you apply your understanding of design and technology, not your graphical skills.

(6)

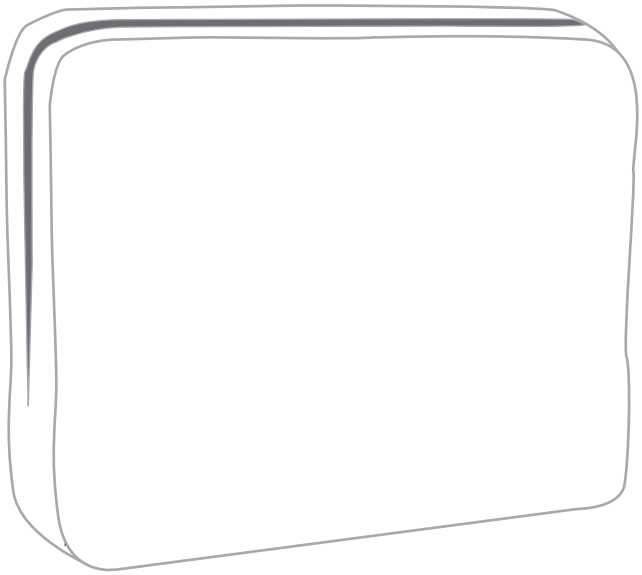

DO NOT WRITE IN THIS AREA
DO NOT WRITE IN THIS AREA
DO NOT WRITE IN THIS AREA

(b) Figure 9 shows a fabric covered wooden boot that is used to help young children learn how to tie their own shoelaces.

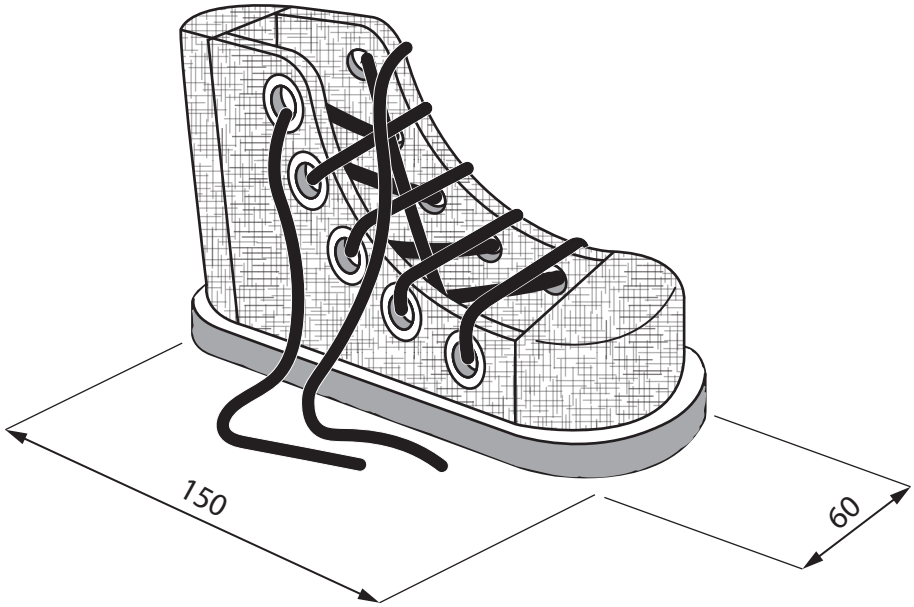

All dimensions in mm

Figure 9

Explain **two** ways that the fabric covered wooden boot meets, or fails to meet, the criteria of providing a method to help young children learn how to tie their own shoelaces.

(4)

1 .....

.....

.....

.....

2 .....

.....

.....

.....

(Total for Question 5 = 10 marks)

DO NOT WRITE IN THIS AREA
DO NOT WRITE IN THIS AREA
DO NOT WRITE IN THIS AREA

6 Figure 10 shows a uniform that some female nurses wear in hospitals.

The uniform is manufactured from a woven cotton fabric.

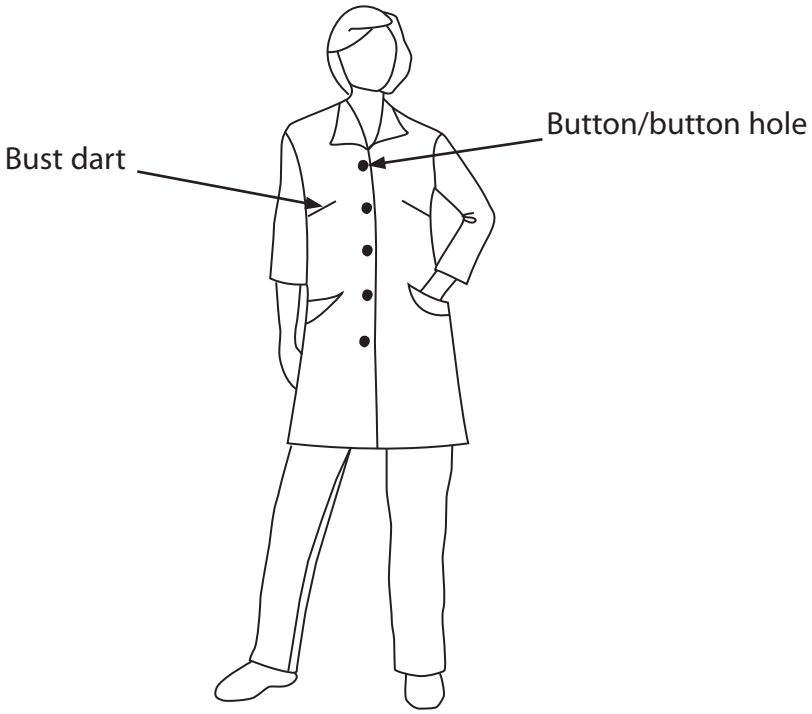

Figure 10

(a) Explain **two** characteristics of cotton that make it an ideal fibre to use and make into the uniform.

(4)

1 .....

.....

.....

.....

2 .....

.....

.....

.....

DO NOT WRITE IN THIS AREA
DO NOT WRITE IN THIS AREA
DO NOT WRITE IN THIS AREA

(b) The uniform has some darts to help it shape around the bust.

Use notes and sketches, in the space below, to show how to create a dart in the uniform to help it shape around the bust.

You will be marked on how you apply your understanding of design and technology, not your graphical skills.

(4)

DO NOT WRITE IN THIS AREA
DO NOT WRITE IN THIS AREA
DO NOT WRITE IN THIS AREA

(c) Explain **one** reason why the button holes must be manufactured to a tolerance.

(2)

.....

.....

.....

.....

(d) Give **two** different chemical surface finishes or treatments that could be applied to the uniform to help with its aftercare.

Explain **one** advantage of using each chemical surface finish or treatment.

(6)

Surface finish or treatment 1

.....

Explanation

.....

.....

.....

Surface finish or treatment 2

.....

Explanation

.....

.....

.....

(Total for Question 6 = 16 marks)

DO NOT WRITE IN THIS AREA
DO NOT WRITE IN THIS AREA
DO NOT WRITE IN THIS AREA

7 Figure 11 shows a tent.

The tent has a back wall that is the same size as the front wall.

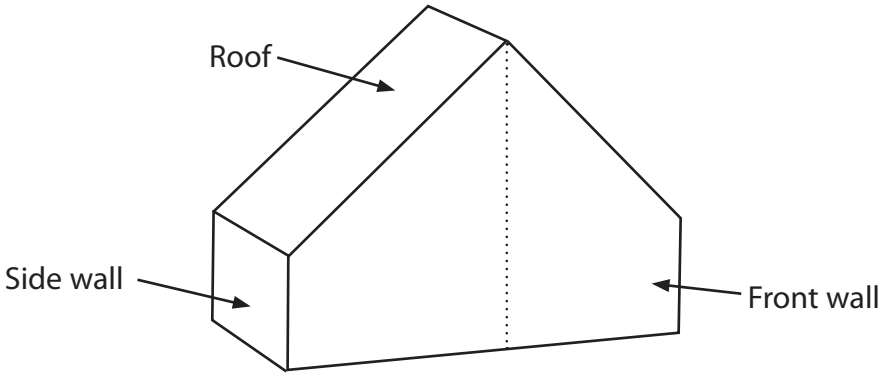

Figure 11

(a) The different pieces are joined together using a method that will prevent water leaking into the tent.

Name one method used to create a fused seam.

(1)

.....

DO NOT WRITE IN THIS AREA
DO NOT WRITE IN THIS AREA
DO NOT WRITE IN THIS AREA

Figure 12 shows a piece for the front wall of the tent which has been designed using computer-aided design (CAD).

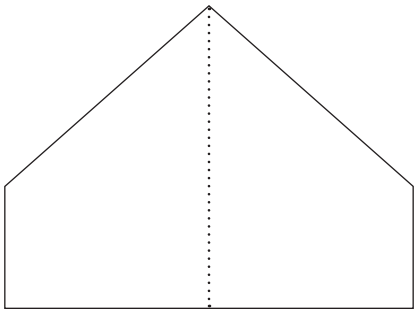

Figure 12

(b) Explain **two** advantages of using CAD when designing the tent.

(4)

1 .....

.....

.....

.....

2 .....

.....

.....

.....

DO NOT WRITE IN THIS AREA
DO NOT WRITE IN THIS AREA
DO NOT WRITE IN THIS AREA

(c) Figure 13 shows a pieces list for the tent.

The material is nylon which costs £3 m^2.

Complete the pieces list by calculating the missing information for each of the five empty boxes, including the total cost.

All dimensions are in metres.

(5)

Piece	Length (m)	Width (m)	Area (m^2)	Number required	Cost (£)
Front / back wall	2.5	3.2	8	2	.....
Roof	2.8	2.0	5.6	2	.....
Side walls	1.5	2.0	.....	2	.....
				Total cost (£)	.....

Figure 13

Working out space

DO NOT WRITE IN THIS AREA
DO NOT WRITE IN THIS AREA
DO NOT WRITE IN THIS AREA

Products are manufactured using different scales of production.

(d) Explain **two** reasons for manufacturing the tent in batches.

(6)

1 .....

.....

.....

.....

.....

.....

2 .....

.....

.....

.....

.....

.....

(Total for Question 7 = 16 marks)

DO NOT WRITE IN THIS AREA
DO NOT WRITE IN THIS AREA
DO NOT WRITE IN THIS AREA

8 Figure 14 shows a table lamp. The lampshade is covered in a linen fabric.

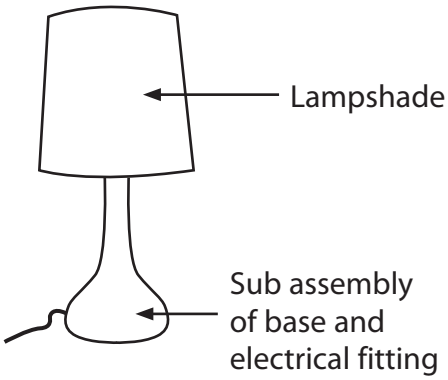

Figure 14

(a) Explain why the fabric on the lampshade is held in tension.

(2)

.....

.....

.....

.....

The base and electrical fitting are manufactured as a sub-assembly for the table lamp.

(b) Explain **one** advantage of manufacturing the base and electrical fitting as a sub-assembly.

(3)

.....

.....

.....

.....

DO NOT WRITE IN THIS AREA
DO NOT WRITE IN THIS AREA
DO NOT WRITE IN THIS AREA

The flax plants for the linen lampshade are grown in Canada.

(c) Explain **two** effects that linen farming can have on the ecological footprint of the land.

(4)

1 .....

.....

.....

.....

2 .....

.....

.....

.....

DO NOT WRITE IN THIS AREA
DO NOT WRITE IN THIS AREA
DO NOT WRITE IN THIS AREA

(d) The lampshade fabric is manufactured from linen, a natural fibre.

Figure 15 shows information about the lampshade and base.

Lampshade material	Linen
Source of material	Canada
Material size	Standard stock sized materials
Power source	Mains electric

Figure 15

Analyse the information in Figure 15.

Evaluate the table lamp with reference to aesthetic and availability factors including:

- form
- colour
- sustainability.

(9)

.....

.....

.....

.....

.....

.....

.....

.....

.....

.....

.....

.....

.....

DO NOT WRITE IN THIS AREA DO NOT WRITE IN THIS AREA DO NOT WRITE IN THIS AREA

DO NOT WRITE IN THIS AREA
DO NOT WRITE IN THIS AREA
DO NOT WRITE IN THIS AREA

(Total for Question 8 = 18 marks)

TOTAL FOR SECTION B = 60 MARKS
TOTAL FOR PAPER = 100 MARKS

BLANK PAGE

DO NOT WRITE IN THIS AREA
DO NOT WRITE IN THIS AREA
DO NOT WRITE IN THIS AREA